Documentation for:

YED/A429/R1-DAT3-5V (Lattice FPGA)

ARINC 429 to 3-channel Analogue Converter

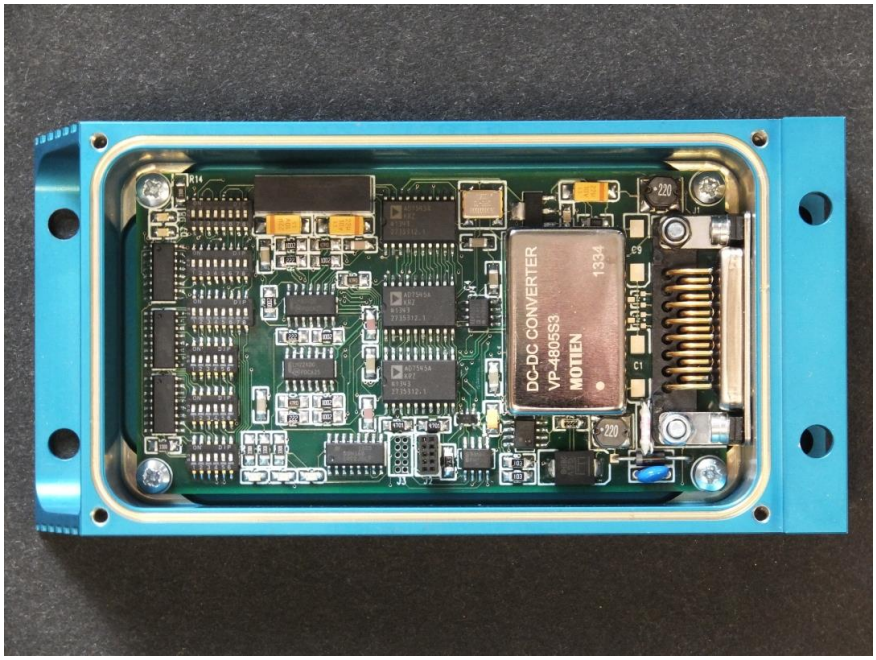

YED Avionics Limited
Park House
10, Park Street
Bristol
Avon BS1 5HX
UK

Tel: *+44 (0) 117 907 4761*
E-mail: support@yed.com
Web: www.yed.com

Amendment Page

Version	Date of Issue	Change Reference	Remarks
1.0	27 Apr 2015	N/A	Original Issue

Original Author: G.S. Brownett
Date of Origin: 27th April 2015
File Ref: A429-R1-DAT3-10V-Lattice.man.doc
Firmware Version: V1.0

CONDITIONS GOVERNING THIS DOCUMENTATION

1. **Purpose of document**
The information for the YED/A429-R1-DAT3-5V is provided for purposes of supplying interface information for use by the end user.

2. **No Grant of Proprietary Rights**
Nothing herein shall be construed as granting to the receiving party any proprietary rights or any licence in respect of YED's proprietary information.

3. **Confidentiality**
No information contained herein shall be used, copied, re-transmitted to third parties or otherwise made use of except for the express purpose defined above in the section covering the 'Purpose of document'.

4. **Disclaimer**
All information, including illustrations, is believed to be reliable. Users however, should independently evaluate the suitability of the product for their particular application. *YED Avionics Limited* makes no warranties as to the accuracy or completeness of the information, and disclaims any liability regarding its use. *YED's* only obligations are those contained in the Standard Terms and Conditions of Sale for any incidental, indirect or consequential damages arising from the sale, resale, use or misuse of the product. See http://www.yed.com/terms.php for more information.
Information contained in this manual is subject to change without notice.

CONTENTS

1 Introduction

This manual contains specification data, installation and instructions for the YED/A429-R1-DAT3-5V, ARINC-429 to Analogue converter.

The function of this converter is to monitor a single ARINC 429 data bus for three selected ARINC 429 labels and to translate the value contained within bits 28 thru 17 into a 0 to 5V DC output.

The ARINC 429 receiver is coupled to the data bus via an Optocoupler to maintain electrical isolation and EMI immunity.

This converter consists of a single channel ARINC 429 receiver and decoder that drive three D/A Converters configured to give a 0-5V DC output for each of up to three received ARINC 429 Labels. The three ARINC 429 Labels are selected by means of surface mounted switches on the printed circuit board. When the specified labels are received the respective analogue output channel is updated to reflect the value contained in the received ARINC 429 data word. The analogue outputs are latched and will maintain the value of the last received data word until new data is received.

The converter can receive high or low speed ARINC 429 data automatically without user intervention. On the PCB there are two LED indicators that display the bit rate of the received ARINC 429 as Hi or Lo bit rates. In addition there are three more LED indicators that indicate reception of the three selected ARINC 429 Labels.

The unit is powered from an external 28 VDC (18-60V) nominal supply with internal current and thermal (102 ºC) fuse. The power inputs are also reverse polarity protected and incorporate all the standard YED EMC/EMI surge protection techniques including a power supply monitoring device, which will cause the system to reset in the event of any problems with the main supply.

A block diagram of the main components of the converter is shown overleaf.

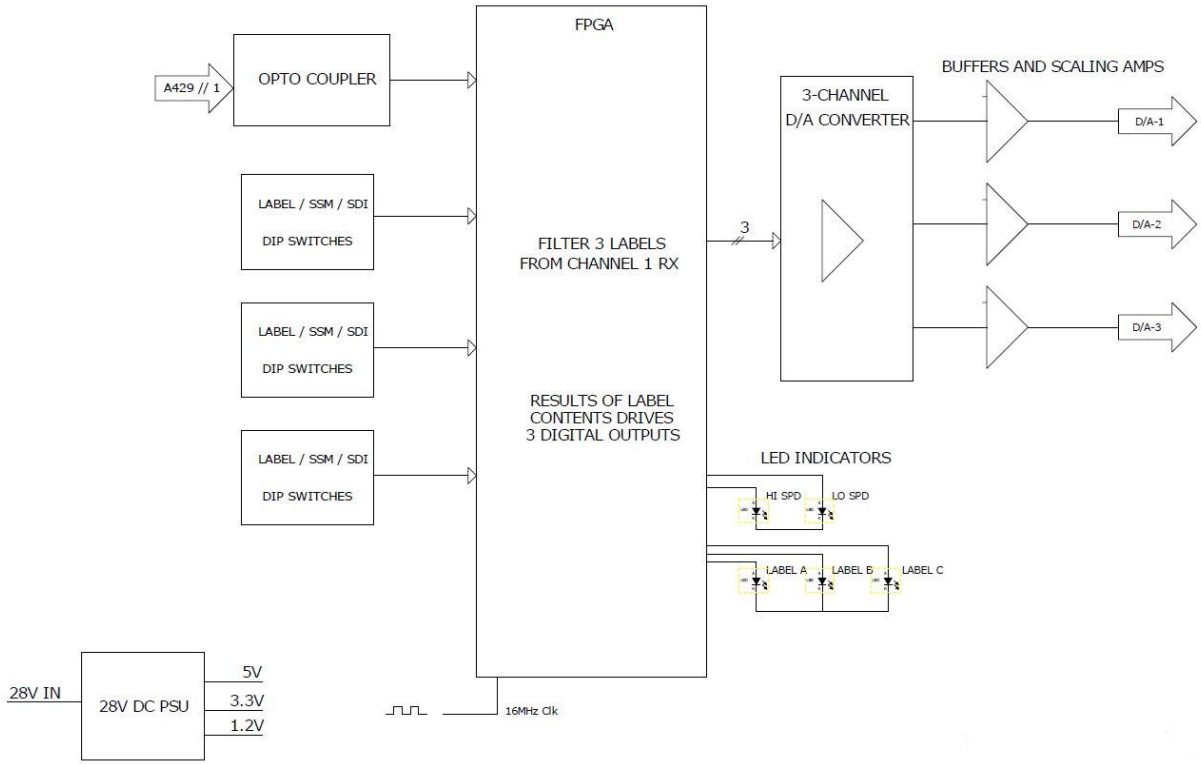

BLOCK DIAGRAM OF CONVERTER INTERNALS

1.1 Firmware

This design is based upon a Field Programmable Gate Array (FPGA) only. There is no microprocessor and therefore RTCA DO-178 certification is not required for this product.

1.2 Environmental, Airworthiness and EMC

The YED/A429-R1-DAT3-5V Converter has been designed to meet DO-160D test categories listed later in this manual.

The unit has also been subjected to an Explosive Decompression test from 15,000 feet to 50,000 feet in a period of less than 100mS without effect. See Annex 1.

1.3 Specification

The YED/A429-R1-DAT3-5V has the following features: -

Physical
The YED/A429-R1-DAT3-5V attaches to the airframe via four mounting holes. See paragraph titled "Enclosure Outline Drawing" for further details.

The enclosure is a CNC machined box with Anodised and an Alocrom 1200 finish.

Height…….…….…….……	28.0mm
Width…….…….…….……	68.0mm
Length…….…….…….……	136.0mm
Weight…….…….…….……..	300 grams (approx.)

Electrical

Input Voltage…….……..	28V DC (15 to 60V DC operational)
Input Current…….……..	30mA maximum at 28V DC
Reverse polarity protected.	
Electrically fused ……	500mA (non-resettable)
Thermally fused ……..	102 Degs. C. (non-resettable)

Indicators (on PCB)

LED bit rate reception:……	Hi Speed/Low Speed
LED Label reception:……	3 LEDs. Label A, B & C.

ARINC 429 Input

Number of receivers……	1
Input is via opto-coupler.	
Bit Rate …….……..	12.5kHz or 100kHz. (auto detecting)

Analogue outputs

Number of Analogue outputs……	3
Channel 1 output ……..	Channel 1 DC output, 0-5V DC
Channel 2 output ……..	Channel 2 DC output, 0-5V DC
Channel 3 output ……..	Channel 3 DC output, 0-5V DC
Bit field of interest ……..	28..17

ARINC 429 Labels filtered (Any 3 from 256)

Channel 1: ……..	User selectable Label via SMD switches
Channel 2: ……..	User selectable Label via SMD switches
Channel 3: ……..	User selectable Label via SMD switches

ARINC 429 SSM and SDI filtering

SSM filtering for channels 1,2 & 3: …….. 11,10,01,00 or XX (Don't care) via SMD switches
SDI filtering for channels 1,2 & 3: …….…….. 11,10,01,00 or XX (Don't care) via SMD switches

Connector

Industry Standard D15 sub-miniature socket.

Environmental

Operating temperature range…..…..…… -40 to +85 degrees C.

2 Configuration of converter

2.1 Description of setting Labels

The values of each of the Labels are set by the adjusting the surface mounted DIP switches on the PCB as shown below.

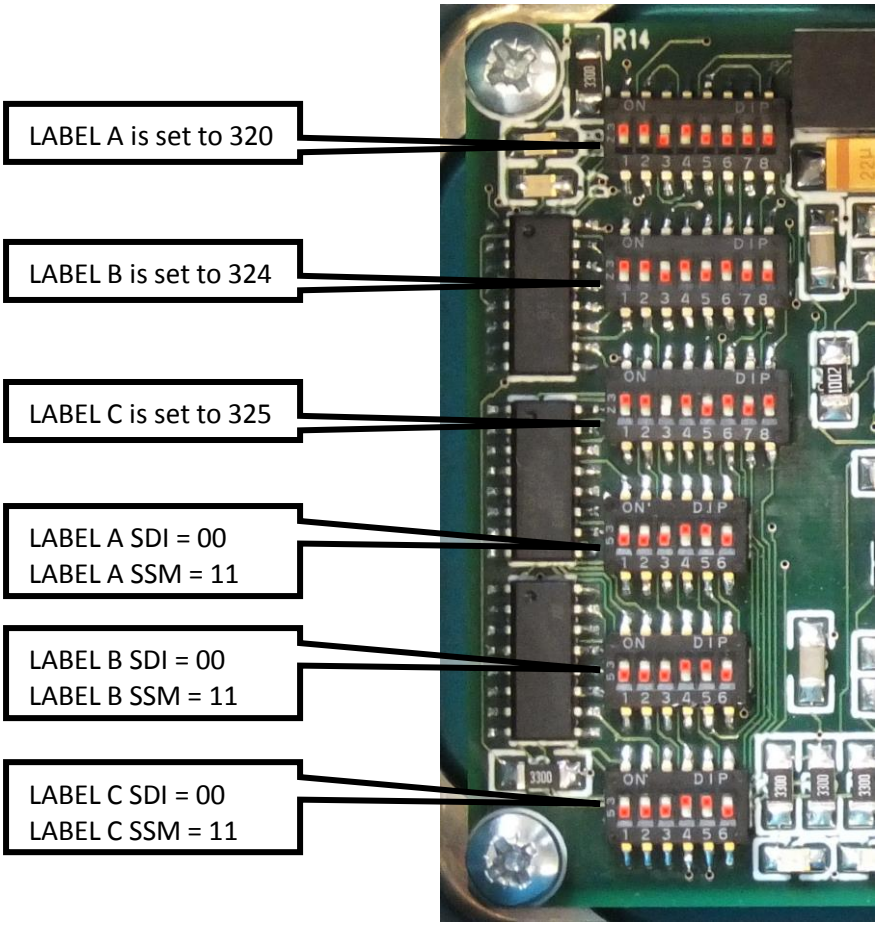

2.2 Label switch description

Labels are coded in Octal.
Red spot denotes a switch set to ON.

LAB-L8	LAB-L7	LAB-L6	LAB-L5	LAB-L4	LAB-L3	LAB-L2	LAB-L1	LABEL
ON	ON		ON					320
ON	ON		ON		ON			324
ON	ON		ON		ON		ON	325

2.3 SDI and SSM switch description

The SDI and SSM switch is coded as shown below.

SDI-10	SDI-09	DON'T CARE	SSM-31	SSM-30	DON'T CARE
			ON	ON	
			ON	ON	
			ON	ON	

SDI-10 refers to Bit 10 of the ARINC 429 word
SDI-11 refers to Bit 11 of the ARINC 429 word
SDI- Don't care means ignore SDI-10 and SDI-9 settings.

SSM-31 refers to Bit 31 of the ARINC 429 word
SSM-30 refers to Bit 30 of the ARINC 429 word
SSM- Don't care means ignore SSM-31 and SSM-30 settings.

Don't care mean that there will not be any filtering of the respective SDI and/or SSM fields.

2.4 ARINC 429 Label and data word format

A typical ARINC 429 data word is shown below.

- Starting at Bit-32 is PARITY

32	31 30	29	28 27 26 25 24 23 22 21 20 19 18 17 16 15 14 13 12 11 10 9	8 7 6 5 4 3 2 1
P	SSM [2]	S	ALTITUDE	LABEL (076)
0	1 1	0	0 0 1 0 1 0 0 1 0 0 1 0 0 0 0 1 1 0 0 0 MSB LSB	0 1 1 1 1 1 0 0 LSB MSB
				6 7 0

- Bits 31 & 30 are the SSM filed, which indicates the status of the data.
- Bit-29 is the sign bit of the data.
- Bits28 thru 9 is the data field for this type of data word. Note that the SDI field on bits 10 & 9 is not present for this particular data word.
- The Label field shown here as 076.

2.5 LED indication showing reception of Labels A, B and C

The image below shows the area of the printed circuit board that contains Label reception status LED indicators. If an LED is lit then the label is being received and decoded.

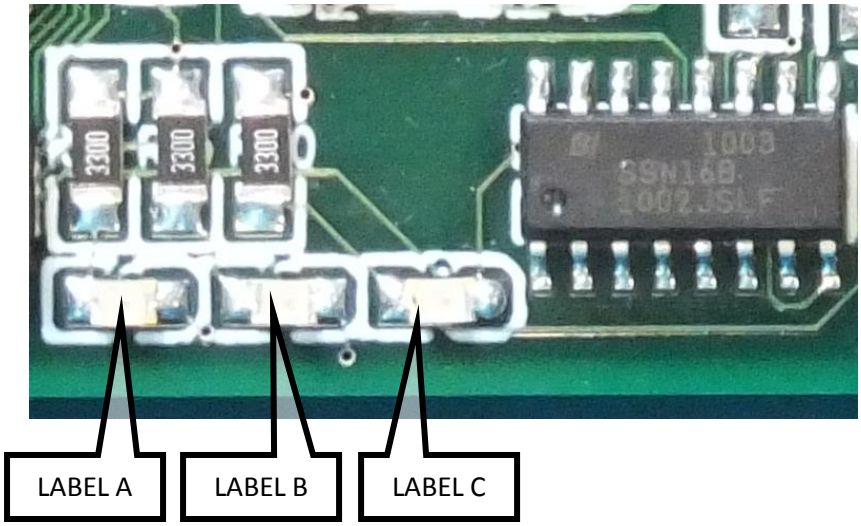

2.6 LED indication of ARINC 429 bit rate

The bit rate of the received ARINC 429 data can be identified by inspection the LEDs as shown below.

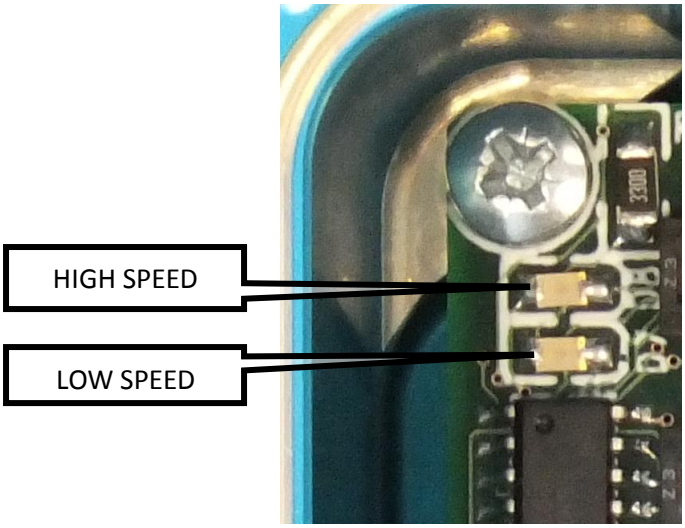

3 Connector Pin Out (D15 Plug)

The YED/A429-R1-DAT3-5V contains a single 15-pin filtered male connector, J1, per MIL-C-24308.

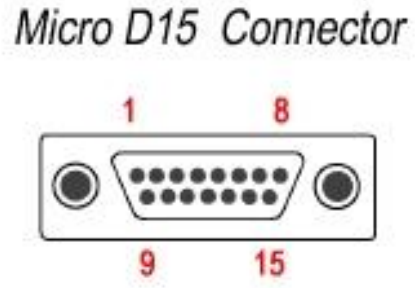

Pin	Signal	Function
1	+28V DC	Primary power
2	0V Ground	28V DC Return
3	A429 Rx +Ve	ARINC 429 Receive (input) RXA
4	A429 Rx -Ve	ARINC 429 Receive (input) RXB
5	A429 Ground (0V)	ARINC 429 Screen (Shield)
6	CH1 : +5V O/P	Channel 1, Label A, 0~5V DC output
7	CH1: 0V O/P	Channel 1 ground / 0V output.
8	CH2 : +5V O/P	Channel 2, Label B, 0~5V DC output
9	CH2: 0V O/P	Channel 2 ground / 0V output.
10	CH3 : +5V O/P	Channel 3, Label C, 0~5V DC output
11	CH4: 0V O/P	Channel 3 ground / 0V output.
12	Reserved	Reserved
13	Reserved	Reserved
14	Reserved	Reserved
15	Reserved	Reserved

Table 1 – J1 Pin Description

4 Enclosure outline drawing

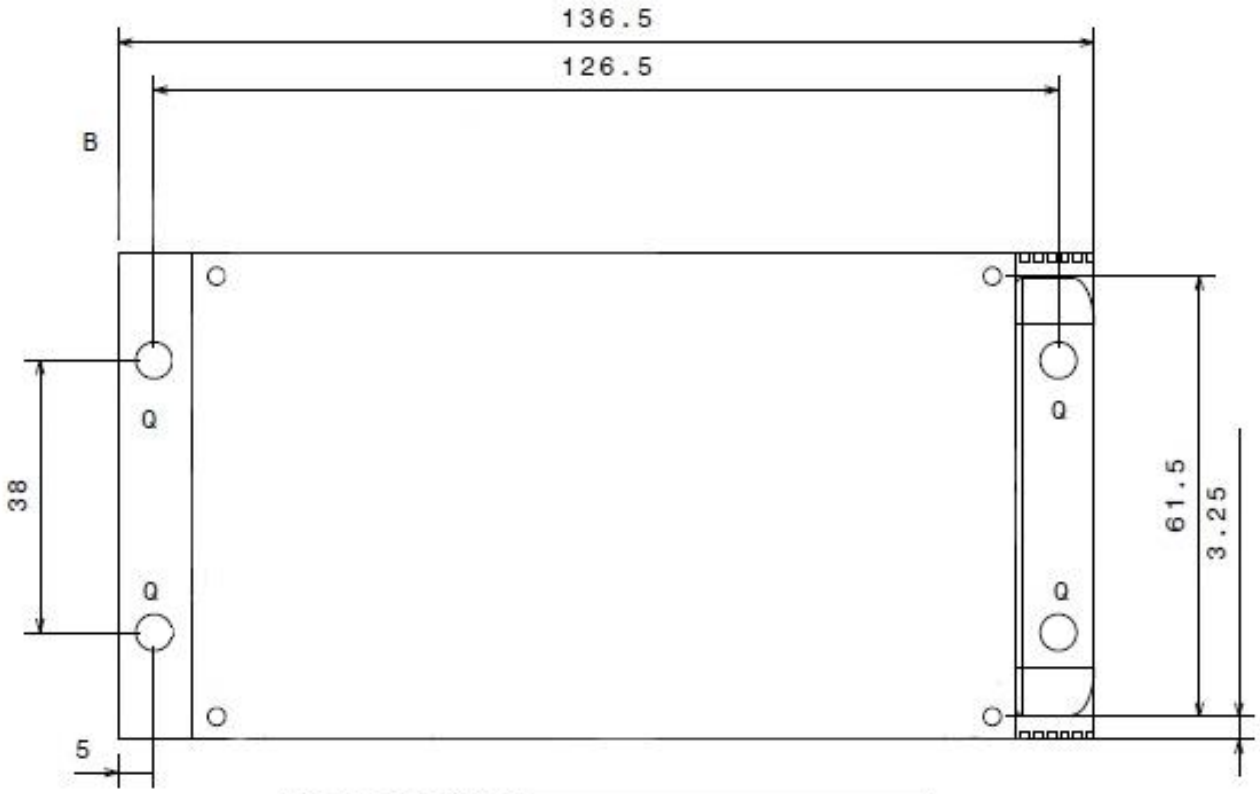

HOLE CODE	TYPE
Q	Ø5.2MM THRU (TOP AND BTM FLANGE)

MATERIAL A/ALLOY 6028 (HE30TF)

All dimensions are in mm.

5 Typical interconnect drawing

A typical equipment interconnect wiring diagram is shown below.

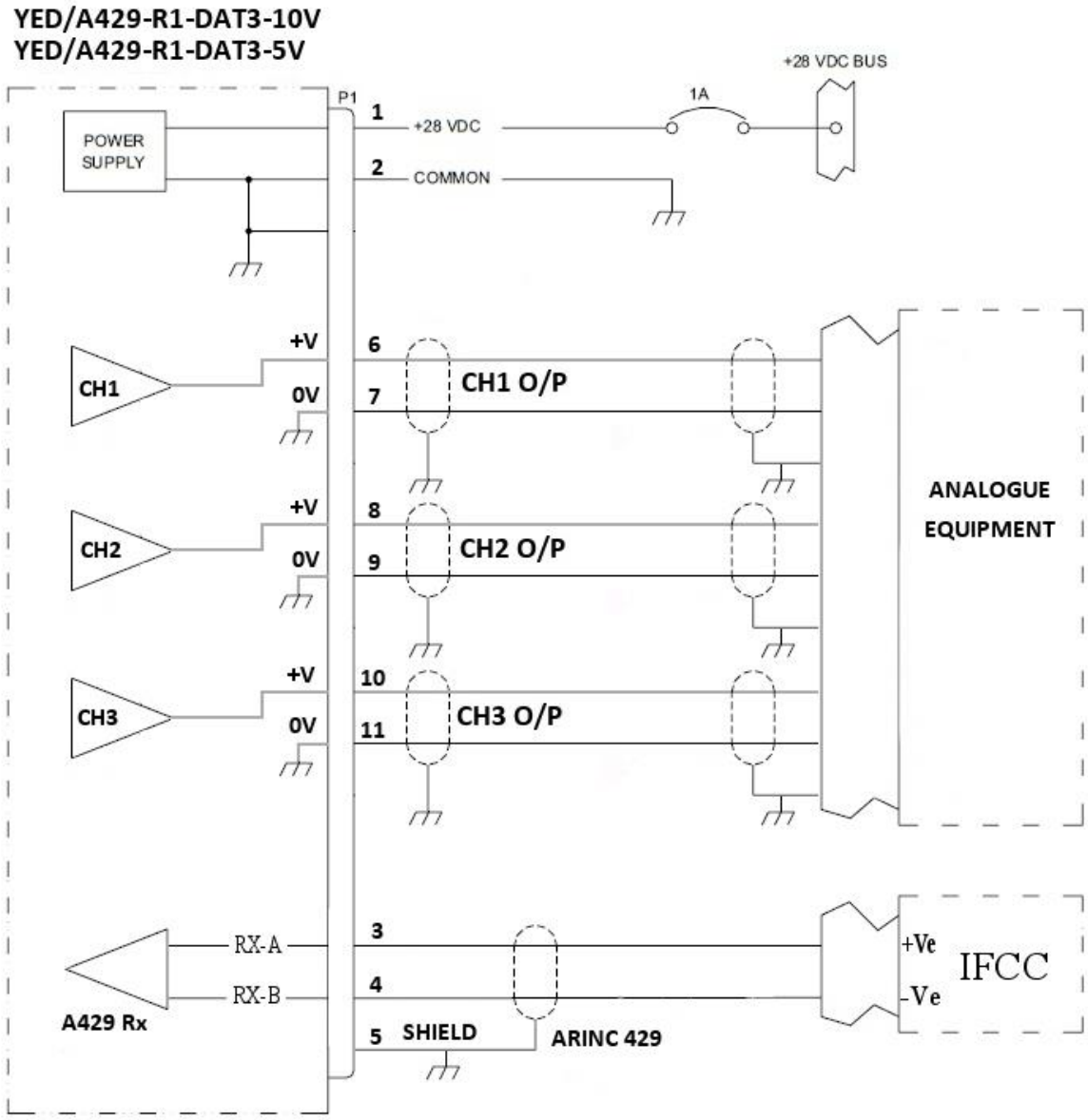

6 Installation

This section provides details for the installation of the YED/A429-R1-DAT3-5V Converter, including configuration and mounting procedures. Follow the procedures and recommendations found in this section to assure a successful installation.

6.1 Electrical considerations

A circuit breaker such as a Klixon 7277-2-1 or equivalent should be considered for connecting the power from the aircraft supply to this converter – even though the converter is internally fused.

6.2 Materials not supplied

- Wire: MIL-W-22759/16 or equivalent
- Shielded wire: MIL-C-27500 or equivalent
- Mounting Screws, 4 each.

6.3 Mounting considerations

The YED/A429-R1-DAT3-5V can be mounted in the avionics bay, shelf or other suitable structure. It can be mounted in any orientation.

6.4 Wiring

Use 22 to 24 AWG wire for all connections.
Fabricate wiring harness, and test all wiring for continuity and for shorts. Ensure aircraft power is present on the correct pins of J1; refer to Table 1.

6.5 Removal and replacement

6.5.1 Removal

1. Open the circuit breaker powering the YED/A429-R1-DAT3-5V.
2. Remove the connector.
3. Remove four (4) screws securing the converter to the airframe.

6.5.2 Replacement

1. Open the circuit breaker powering the YED/A429-R1-DAT3-5V
2. Secure the converter to the airframe with four (4) screws.
3. Attach the connector and secure
4. Close the circuit breaker.
5. Perform operational test of the YED/A429-R1-DAT3-5V

6.6 Continued Airworthiness

6.6.1 Scheduled Maintenance

- Recommended periodic scheduled servicing……. None
- Recommended periodic scheduled preventative maintenance tests…….. None
- Recommended periodic inspections…….. None
- Recommended period overhaul period……. None
- Special inspection requirements……. None

There are no Airworthiness limitations associated with the installation of this converter.

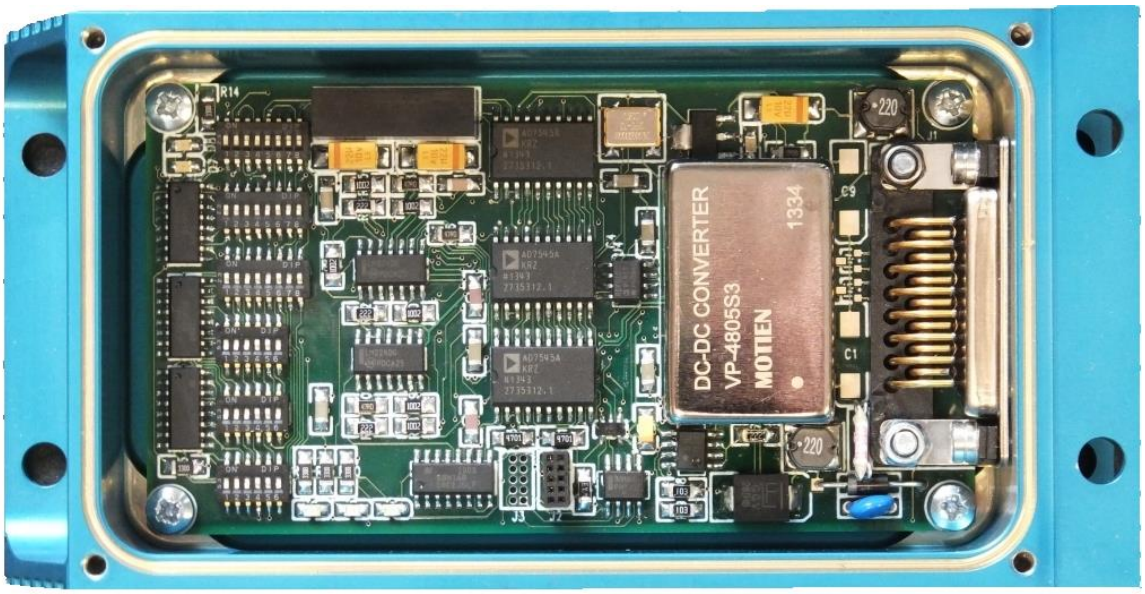

7 Environmental & EMC

The YED/A429-R1-DAT3-5V has been designed to meet the environmental test categories detailed below in accordance with RTCA DO-160D, Environmental Conditions and Test Procedure for Airborne Equipment.

Section	Category	Remarks
4.0 Temperature and Altitude	A1, A2	25,000 feet.
5.0 Temperature and variation	B, C	
6.0 Humidity	A	
7.0 Operational Shock and Crash Safety	B	
8.0 Vibration	C,M	
9.0 Explosion Proofness	X	Not tested – See Annex 1
10.0 Waterproofness	X	Not tested
11.0 Fluids susceptibility	X	Not tested
12.0 Sand and Dust	X	Not tested
13.0 Fungus Resistance	X	Not tested
14.0 Salt Spray	X	Not tested
15.0 Magnetic Effect	Z	
16.0 Power Input	A	
17.0 Voltage Spike	B	
18.0 AF Conducted Susceptibility – Power Inputs	A	
19.0 Induced Signal Susceptibility	A, Z	
20.0 Radio Frequency Susceptibility (Radiated and Conducted)	T, V	
21.0 Emission of Radio Frequency Energy	A, Z	
22.0 Lightening Induced Transient Susceptibility	A,B,Z	Discrete sense pins and ARINC 429 driver output.
23.0 Lightening Direct Effects	X	Not tested
24.0 Icing	X	Not tested
25.0 ESD	X	Not tested

8 Annex 1 – Explosive Decompression tests

DECOMPRESSION TESTING OF NAVIGATION UNIT

1. QinetiQ Building 800 Hypobaric Facility (Boscombe Down) were tasked to carry out decompression testing of a TACAN Converter unit . The reason for this testing, in conjunction with other required testing, is to enable clearance to be given for the equipment to be fitted and operated on-board RAF aircraft.

2. The equipment to be tested was supplied on 22nd May 2013 and comprised:

   - YED TACAN Converter unit. Local Serial No. 001.

3. Prior to the decompression test, the manufacturer had verified to the representatives supplying the equipment that the equipment was serviceable. The equipment did not require to be functioning during the testing and was to be returned to the manufacturer for examination post testing.

4. The decompression test was carried out in the Hypobaric Chamber (Building 800) on May 2013 to the following decompression test profile:

   - Chamber ascent to 15,000 ft at a rate of 5,000 ft/min.
   - Hold for a minimum of 1 minute.
   - Rapid decompression to 50,000 ft (To reach 90% of the final altitude within a 0.1-second time period).
   - Hold chamber altitude for a minimum of 5 minutes.
   - Chamber descent to ground level at 5,000 ft/min.

5. The altitude profile within the chamber was recorded on an ADI Instruments Power Lab data acquisition system. Annex A shows the test profile from; ground level (760 mmHg) to 15,000 ft (428 mmHg), explosive decompression to 50,000 ft (87 mmHg) in less than 0.1 second, hold for a minimum of 5 minutes, descent back down to ground level. Chamber ascent from ground level to 15,000 ft and descent from 50,000 ft to ground level was carried out at a rate of 5,000 ft /min. Annex B shows the actual rapid decompression in greater detail during which the chamber reached 90% of the final altitude in a 0.05-second time period. The rates of change of altitude, or pressure, within the chamber are controlled in units of feet per minute (ft/min). For this reason, the pressure recordings show a curvature due to the non-linearity of the altitude/pressure relationship.

6. The chamber decompression test proceeded without incident and as far as could be seen, without any effect on the equipment. The Boscombe Down representative will return the equipment to the manufacturer for examination.

7. This documented detail of the testing has been produced by Chas Taylor (Air Division). (Boscombe Down).

5 June 2013 Page 1 of 3

EXPLOSIVE DECOMPRESSION TEST PROFILE

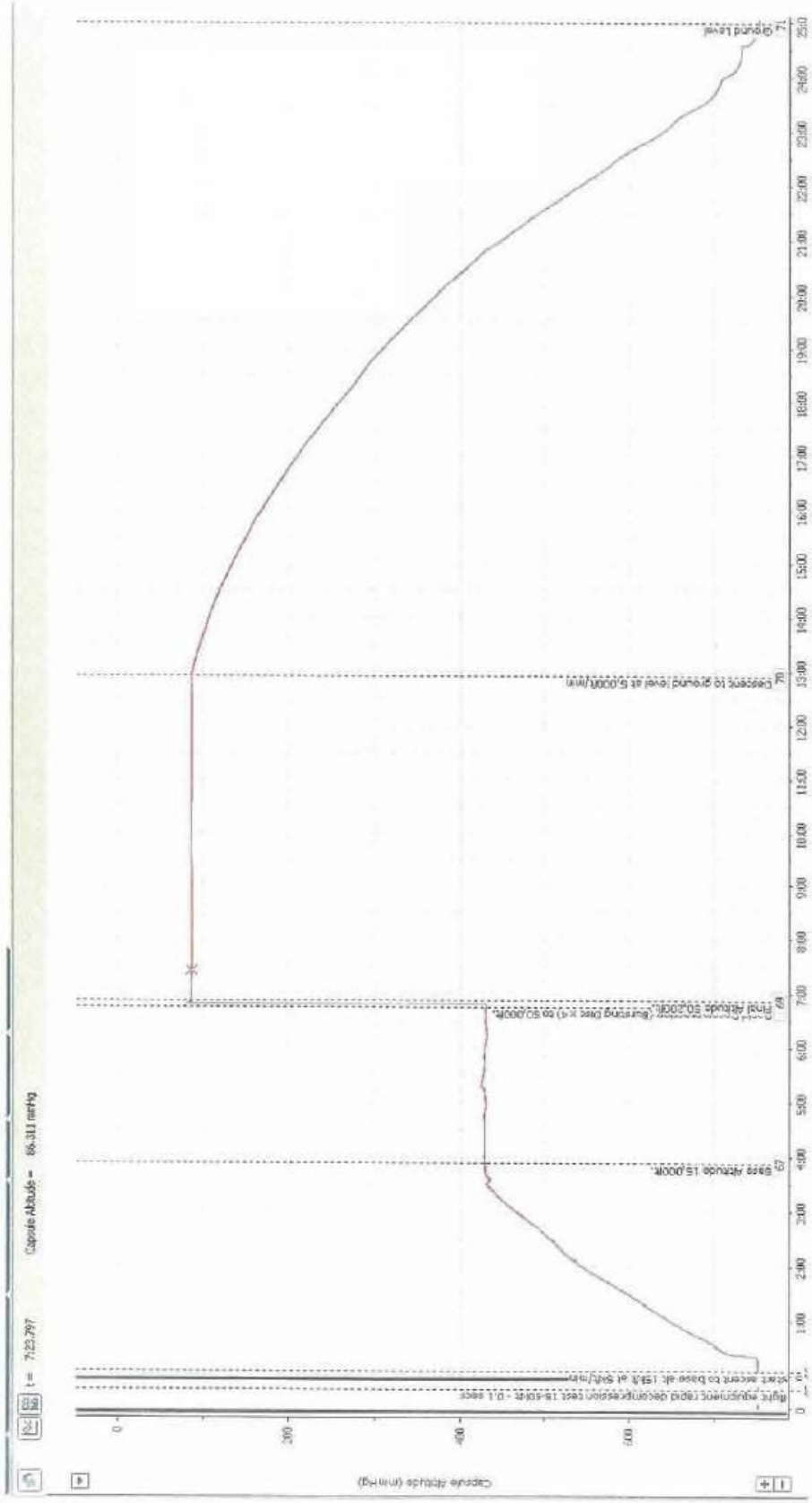

Time: minutes/seconds

5 June 2013

Page 2 of 3

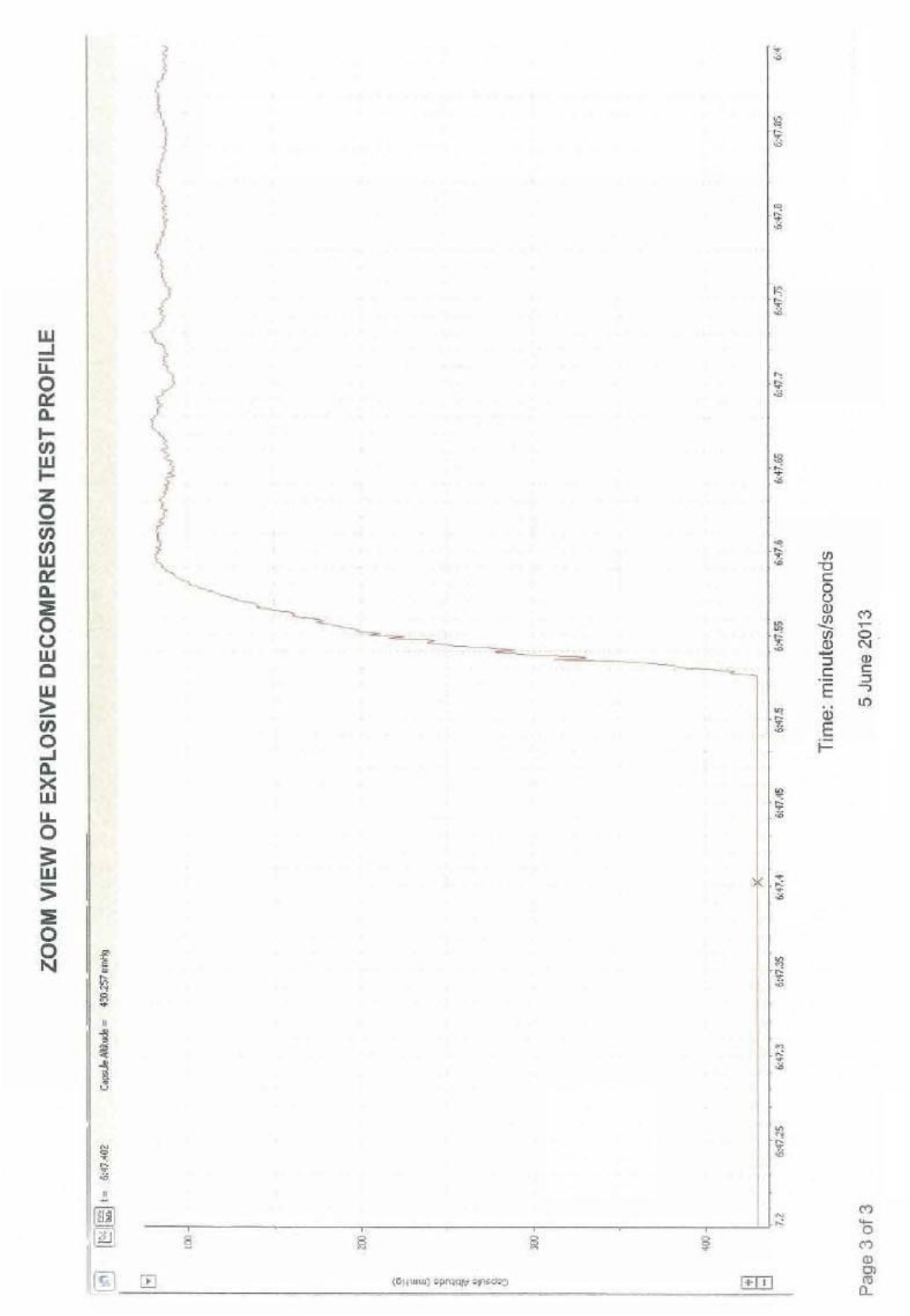
ZOOM VIEW OF EXPLOSIVE DECOMPRESSION TEST PROFILE
t = 6:47.402
Capsule Altitude = 430.257 mmHg
Capsule Altitude (mmHg)
100
200
300
400
7.2
6:47.25
6:47.3
6:47.35
6:47.4
6:47.45
6:47.5
6:47.55
6:47.6
6:47.65
6:47.7
6:47.75
6:47.8
6:47.85
Time: minutes/seconds
5 June 2013
Page 3 of 3